DAM DX-DA| Gaisa aizkara siltumsūknis Daikin

Īpašības



- Enerģiju taupošs siltumsūkņa gaisa aizkars: Līdz 70% izmaksu un CO2 emisiju samazināšana (apkures režims).
- Pašbalstoša cinkota tērauda plāksnes korpusa konstrukcija, standartā ar strukturālu epoksīda-poliestera apdari baltā RAL9016 krāsā.Pēc pieprasījuma ir pieejamas arī citas krāsas un nerūsējošais tērauds.
- Mikroperforēts ieplūdes režģis ar filtra funkcijām un vieglu apkopi.Iekšējs pirmsfiltrs iekļauts.
- Anodētas alumīnija izplūdes lāpstiņas, spārna formas, pielāgojasm no 0 līdz 15º no katras puses.
- Dubultas ieplūdes centrbērzes ventilatori ar ārējā rotora dzinēja vadību un zemu trokšņa līmeni. 5 ātruma selektori.EC modeļi samontēti kopā ar ļoti zema patēriņa efektīviem ventilatoriem.
- Iekšējs pirmsfiltrs iekļauts.
- Advanced Plug&Play control. Includes: Advanced PRO control with integrated LCD screen, door contact, 7m RJ11 cable and remote control. With integrated functions: door delay (configurable); operation, alarm and maintenance warning signals; and multiple digital inputs that modify the curtain's operation.
- Includes protective varnish for the electronic board and control.
- DX 1:1:
  Gatavs savienošanai ar DAIKIN inventora āra siltumsūkņa bloku (R32) un izplešanās vārstu, kas nav iekļauts. Nepieciešams DAIKIN DX interfeisa KOMPLEKTS pielāgots gaisa aizkaram un programmējamai vadībai.
- DX VRV:
  Gatavs savienošanai ar DAIKIN inventora āra siltumsūkņa bloku (R410A) un izplešanās vārstu, kas nav iekļauts. Nepieciešams DAIKIN VRV interfeisa KOMPLEKTS pielāgots gaisa aizkaram un programmējamai vadībai.

Specifikācijas

50Hz

Modelis	(m³/h)	(m)
DAM ECM 1500 DX12-DA	5/8" - 3/8"	
DAM ECM 2000 DX16-DA	5/8" - 3/8"	
DAM ECM 2500 DX21-DA	3/4" - 3/8"	
DAM ECM 2500 DX24-DA	3/4" - 3/8"	
DAM ECM 3000 DX26-DA	3/4" - 3/8"	
DAM ECG 1000 DX10-DA	5/8" - 3/8"	
DAM ECG 1500 DX13-DA	5/8" - 3/8"	
DAM ECG 1500 DX15-DA	5/8" - 3/8"	
DAM ECG 2000 DX22-DA	3/4" - 3/8"	
DAM ECG 2500 DX25-DA	3/4" - 3/8"	
DAM ECG 2500 DX29-DA	7/8" - 1/2"	
DAM ECG 3000 DX34-DA	7/8" - 1/2"	

Modelis	(m³/h)	(m)
DAM ECM 1000 VRV8-DA	5/8" - 3/8"	
DAM ECM 1500 VRV12-DA	5/8" - 3/8"	
DAM ECM 2000 VRV16-DA	5/8" - 3/8"	
DAM ECM 2000 VRV19-DA	3/4" - 3/8"	
DAM ECM 2500 VRV21-DA	3/4" - 3/8"	
DAM ECM 2500 VRV24-DA	3/4" - 3/8"	
DAM ECM 3000 VRV26-DA	3/4" - 3/8"	
DAM ECM 3000 VRV30-DA	7/8" - 3/8"	
DAM ECG 1000 VRV10-DA	5/8" - 3/8"	
DAM ECG 1500 VRV13-DA	5/8" - 3/8"	
DAM ECG 1500 VRV15-DA	5/8" - 3/8"	
DAM ECG 2000 VRV20-DA	3/4" - 3/8"	
DAM ECG 2000 VRV24-DA	3/4" - 3/8"	
DAM ECG 2500 VRV25-DA	3/4" - 3/8"	
DAM ECG 2500 VRV29-DA	7/8" - 3/8"	
DAM ECG 3000 VRV29-DA	7/8" - 3/8"	
DAM ECG 3000 VRV34-DA	7/8" - 3/8"	

60Hz

Modelis	(m³/h)	(m)
DAM ECM 1500 DX12-DA	5/8" - 3/8"	
DAM ECM 2000 DX16-DA	5/8" - 3/8"	
DAM ECM 2500 DX21-DA	3/4" - 3/8"	
DAM ECM 2500 DX24-DA	3/4" - 3/8"	
DAM ECM 3000 DX26-DA	3/4" - 3/8"	
DAM ECG 1000 DX10-DA	5/8" - 3/8"	
DAM ECG 1500 DX13-DA	5/8" - 3/8"	
DAM ECG 1500 DX15-DA	5/8" - 3/8"	
DAM ECG 2000 DX22-DA	3/4" - 3/8"	
DAM ECG 2500 DX25-DA	3/4" - 3/8"	
DAM ECG 2500 DX29-DA	7/8" - 1/2"	
DAM ECG 3000 DX34-DA	7/8" - 1/2"	

Modelis	(m³/h)	(m)
DAM ECM 1000 VRV8-DA	5/8" - 3/8"	
DAM ECM 1500 VRV12-DA	5/8" - 3/8"	
DAM ECM 2000 VRV16-DA	5/8" - 3/8"	
DAM ECM 2000 VRV19-DA	3/4" - 3/8"	
DAM ECM 2500 VRV21-DA	3/4" - 3/8"	
DAM ECM 2500 VRV24-DA	3/4" - 3/8"	
DAM ECM 3000 VRV26-DA	3/4" - 3/8"	
DAM ECM 3000 VRV30-DA	7/8" - 3/8"	
DAM ECG 1000 VRV10-DA	5/8" - 3/8"	
DAM ECG 1500 VRV13-DA	5/8" - 3/8"	
DAM ECG 1500 VRV15-DA	5/8" - 3/8"	
DAM ECG 2000 VRV20-DA	3/4" - 3/8"	
DAM ECG 2000 VRV24-DA	3/4" - 3/8"	
DAM ECG 2500 VRV25-DA	3/4" - 3/8"	
DAM ECG 2500 VRV29-DA	7/8" - 3/8"	
DAM ECG 3000 VRV29-DA	7/8" - 3/8"	
DAM ECG 3000 VRV34-DA	7/8" - 3/8"	

Izmēri

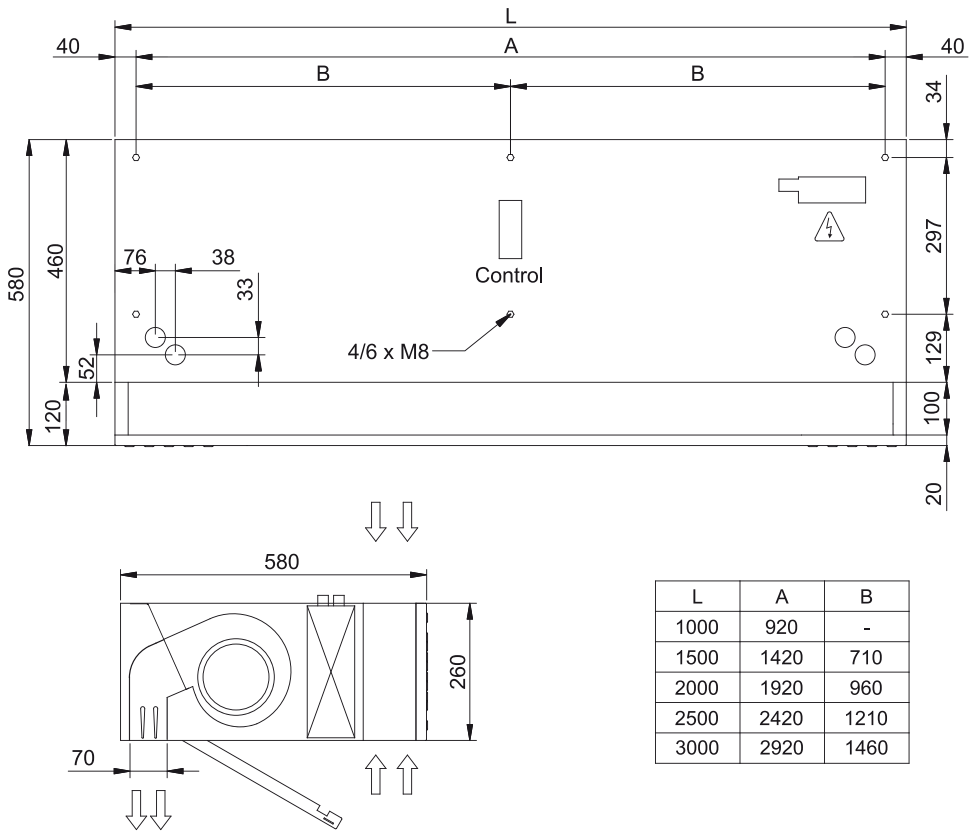

L	A	B
1000	920	-
1500	1420	710
2000	1920	960
2500	2420	1210
3000	2920	1460